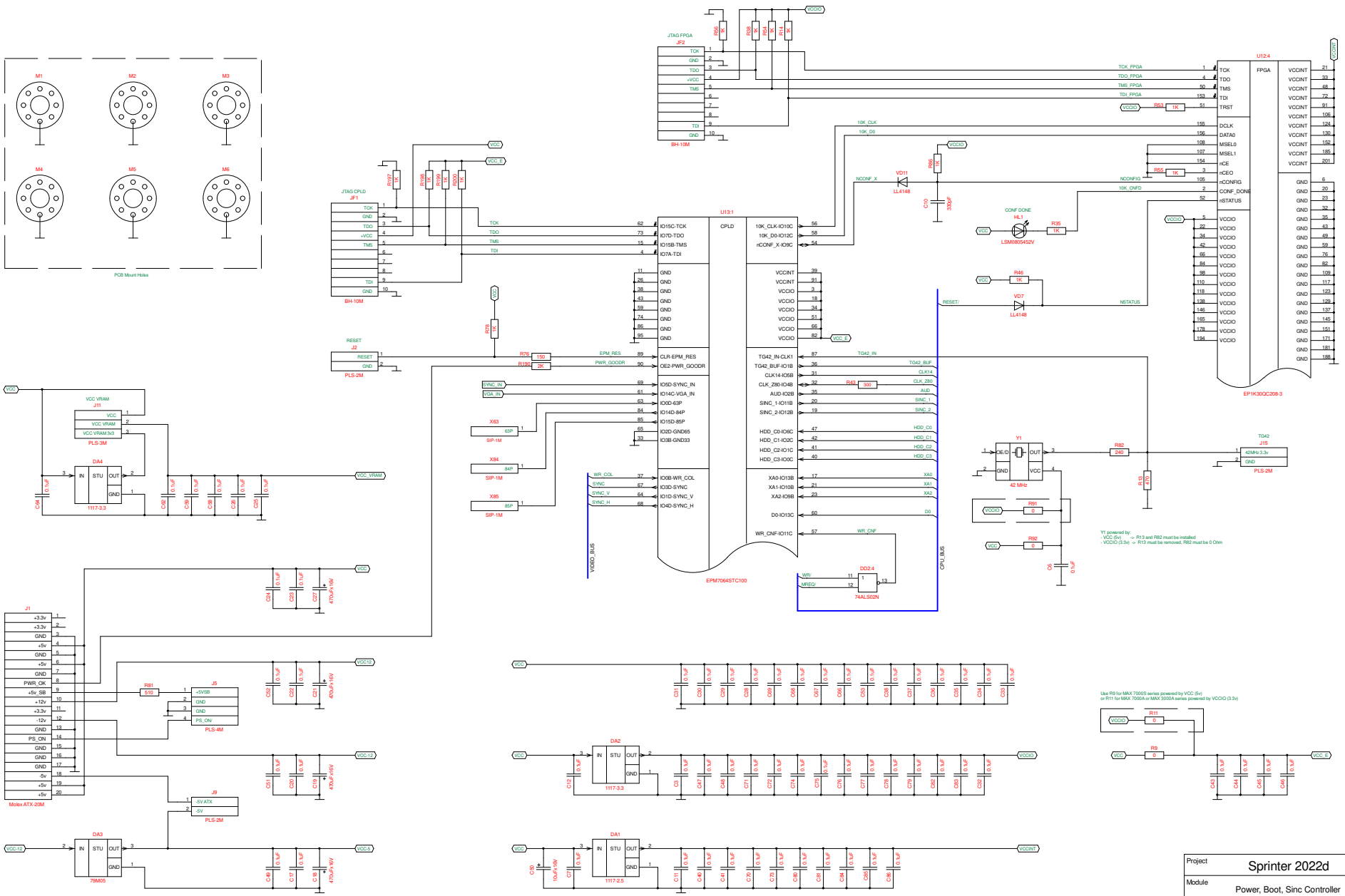

Project	Sprinter 2022d		
Module	Power, Boot, Sinc Controller		
Size	A1	Author	Ivan Mak
Rev	A		
Date	Thu Dec 08, 2022	Drawn by	RomanRom2
Filename	sp2022.sch	Sheet	1 of 7

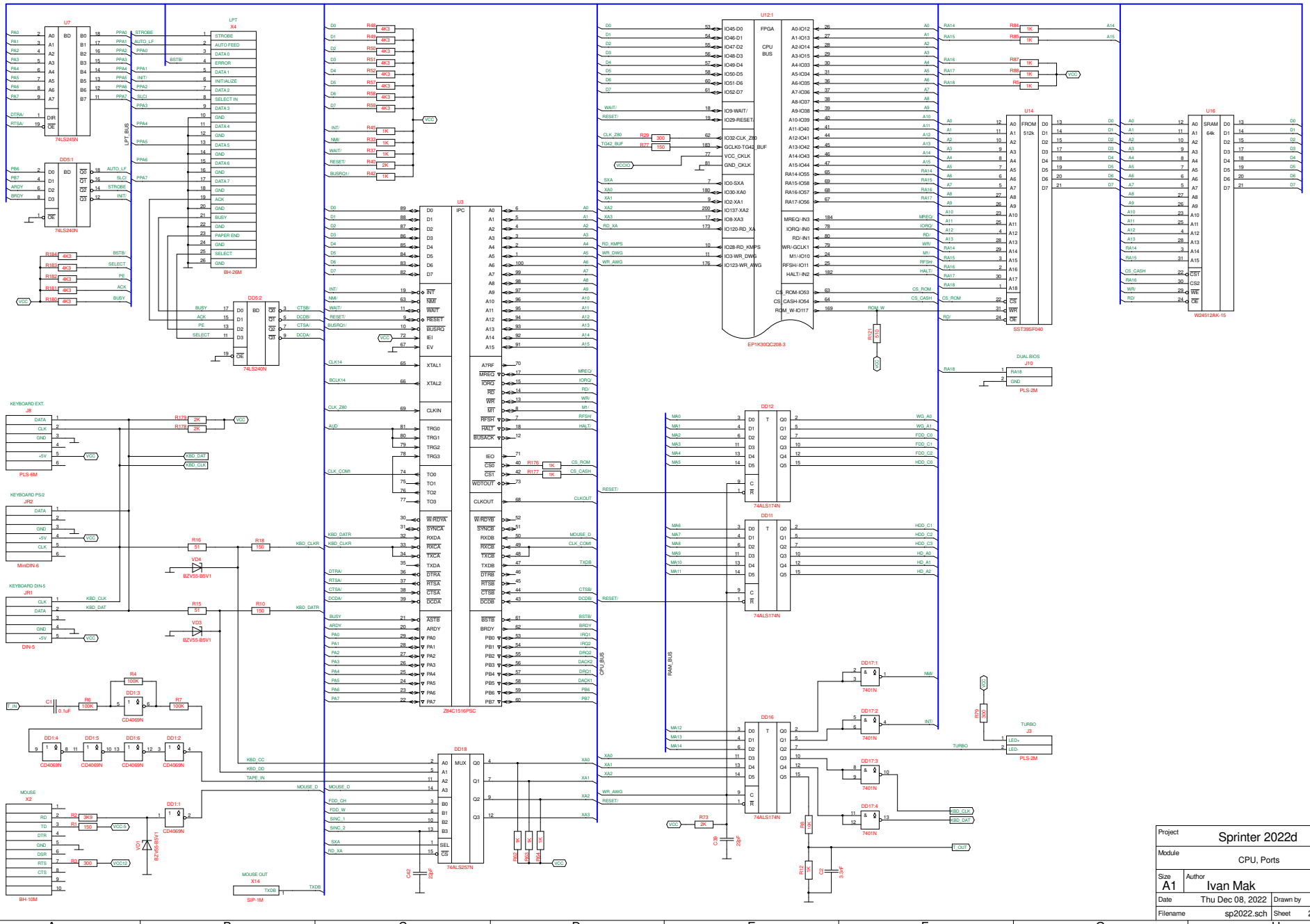
U7
74LS245N
DD5:1
74LS240N
LPT
X4
BH-26M
DD5:2
74LS240N
U3
Z84C1516PSC
U12:1
EP1K30QC208-3
U14
SST39SF040
U16
W24512AK-15
DUAL BIOS
J10
PLS-2M
KEYBOARD EXT.
J8
PLS-6M
KEYBOARD PS/2
JR2
MiniDIN-6
KEYBOARD DIN-5
JR1
DIN-5
MOUSE
X2
BH-10M
MOUSE OUT
X14
SIP-1M
DD12
74ALS174N
DD11
74ALS174N
DD16
74ALS174N
DD18
74ALS257N
DD17:1
DD17:2
DD17:3
DD17:4
7401N
TURBO
J3
PLS-2M
Project
Sprinter 2022d
Module
CPU, Ports
Size
A1
Author
Ivan Mak
Rev
A
Date
Thu Dec 08, 2022
Drawn by
RomanRom2
Filename
sp2022.sch
Sheet
2
of
7

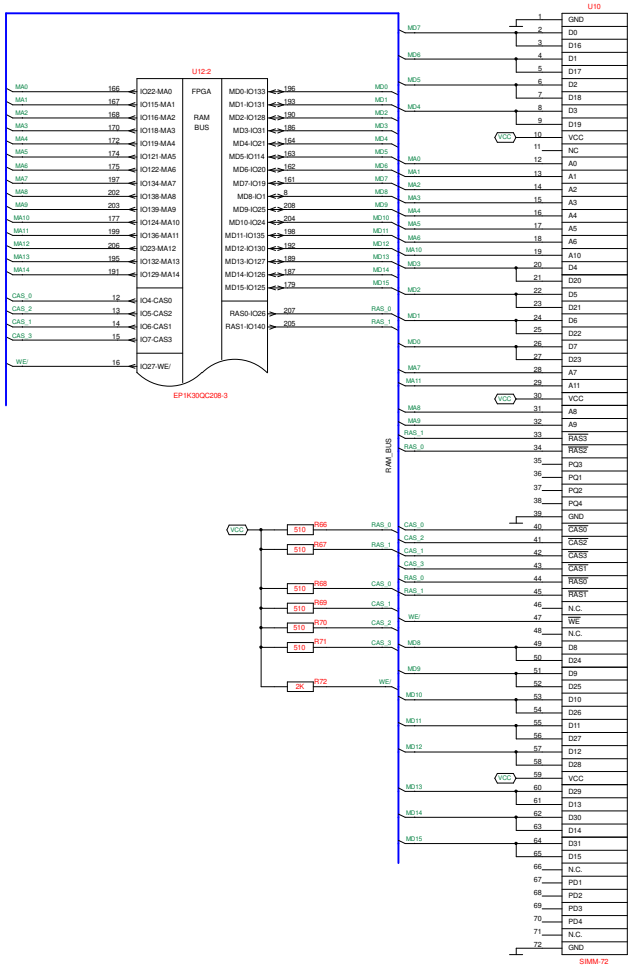

Project	Sprinter 2022d
Module	RAM
Size	A1
Author	Ivan Mak
Rev	A
Date	Thu Dec 08, 2022
Drawn by	RomanRom2
Filename	sp2022.sch
Sheet	3 of 7

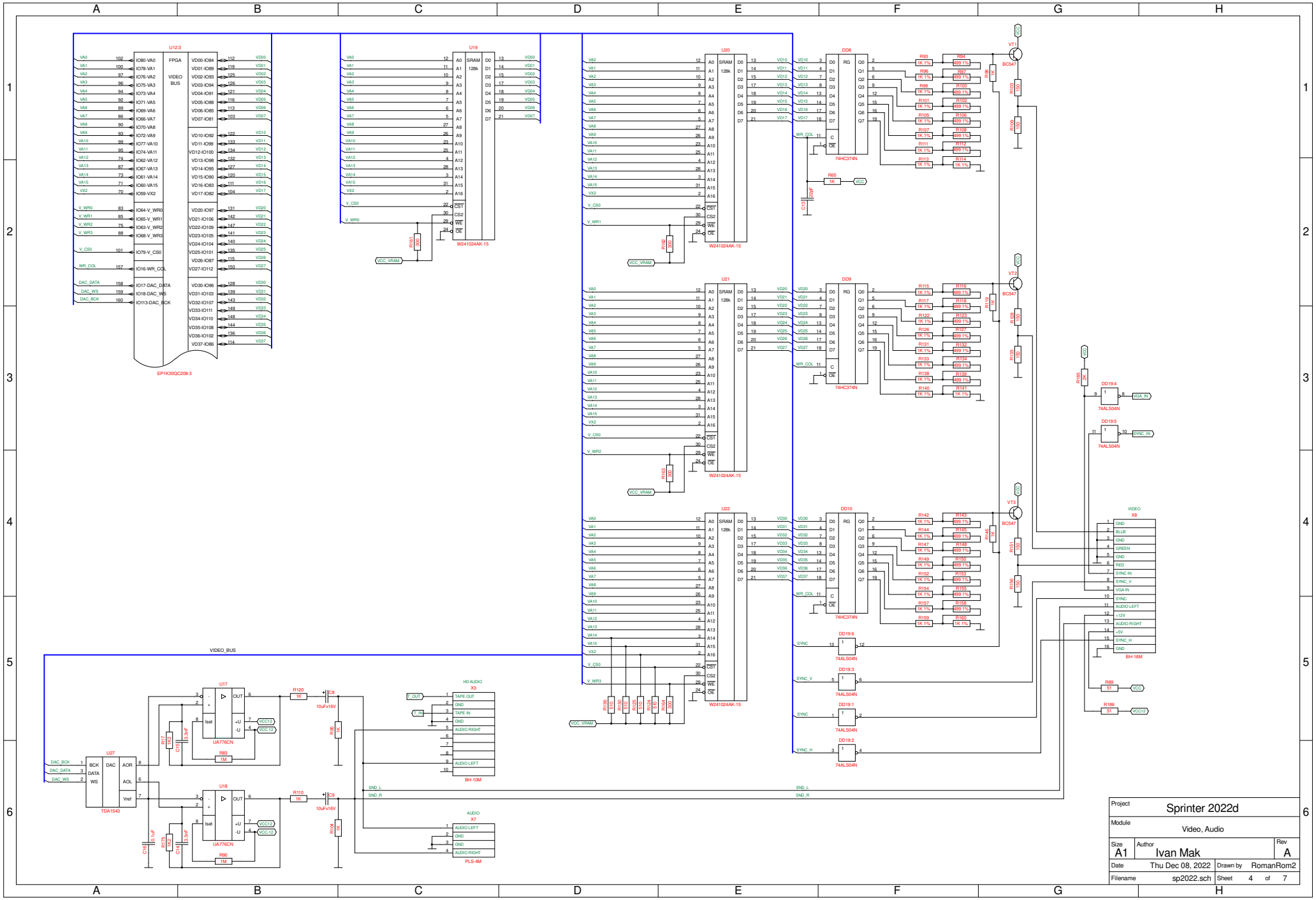
U12:3
EP1K30QC208-3
U19
W241024AK-15
U20
U21
U22
DD8
DD9
DD10
74HC374N
VT1
VT2
VT3
BC547
DD19:4
DD19:5
DD19:6
DD19:3
DD19:1
DD19:2
74ALS04N
VIDEO
X8
BH-16M
VIDEO_BUS
U17
U18
UA776CN
U27
TDA1543
HD AUDIO
X3
BH-10M
AUDIO
X7
PLS-4M
SND_L
SND_R
VCC_VRAM
VCC12
VGA_IN
SYNC_IN
Project
Sprinter 2022d
Module
Video, Audio
Size
A1
Author
Ivan Mak
Rev
A
Date
Thu Dec 08, 2022
Drawn by
RomanRom2
Filename
sp2022.sch
Sheet
4
of
7

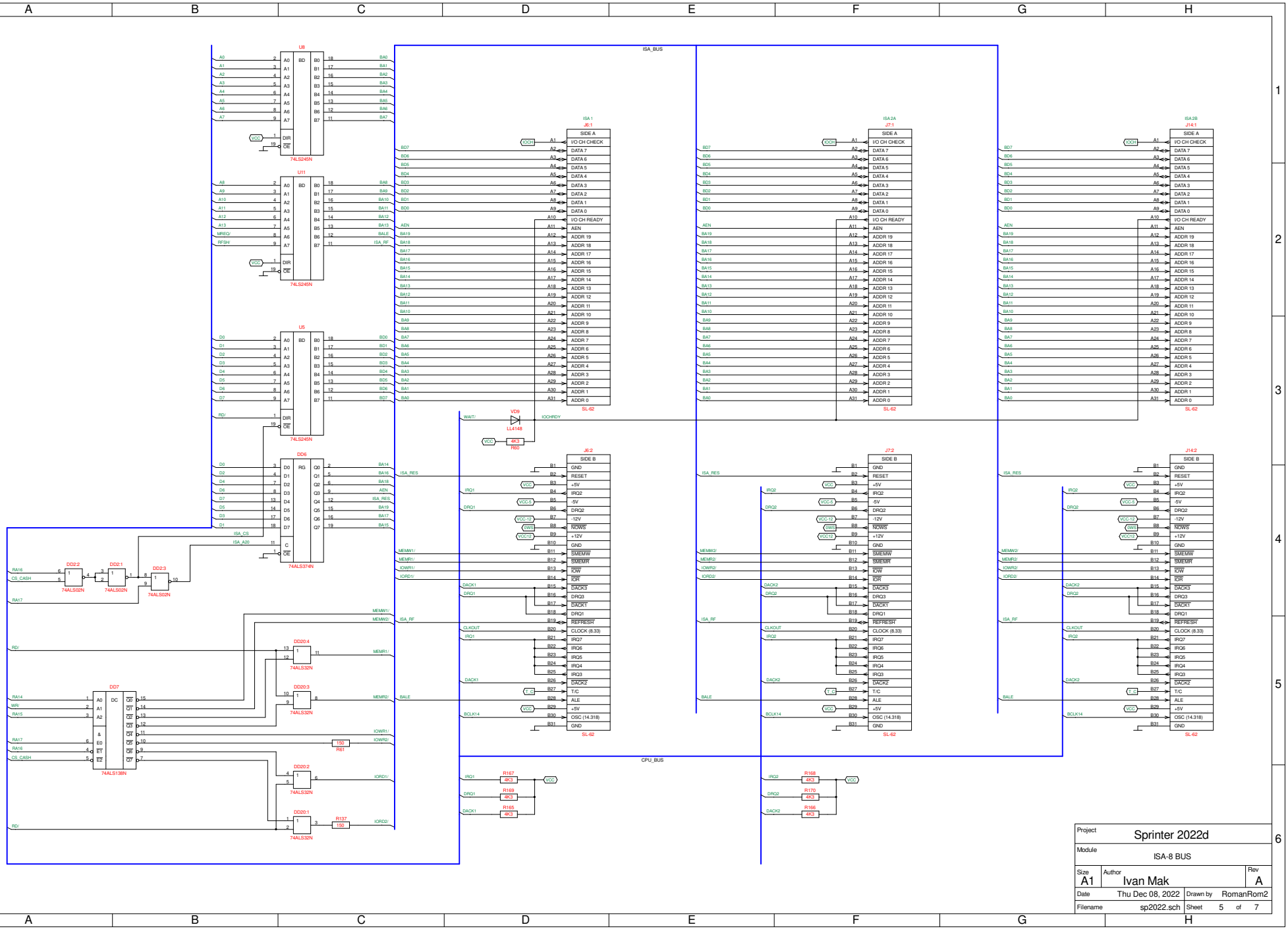

Project	Sprinter 2022d		
Module	ISA-8 BUS		
Size	A1	Author	Ivan Mak
Rev	A		
Date	Thu Dec 08, 2022	Drawn by	RomanRom2
Filename	sp2022.sch	Sheet	5 of 7

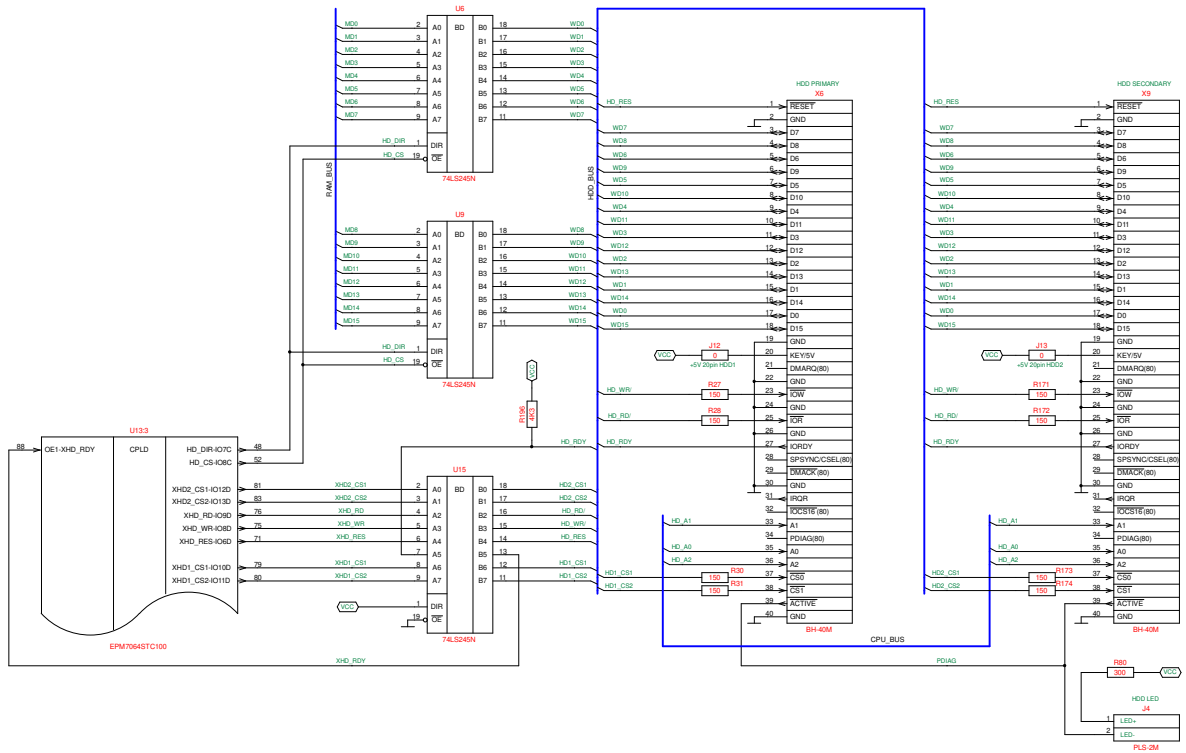

Project	Sprinter 2022d		
Module	HDD Controller		
Size	A1	Author	Ivan Mak
Rev	A		
Date	Thu Dec 08, 2022	Drawn by	RomanRom2
Filename	sp2022.sch	Sheet	6 of 7

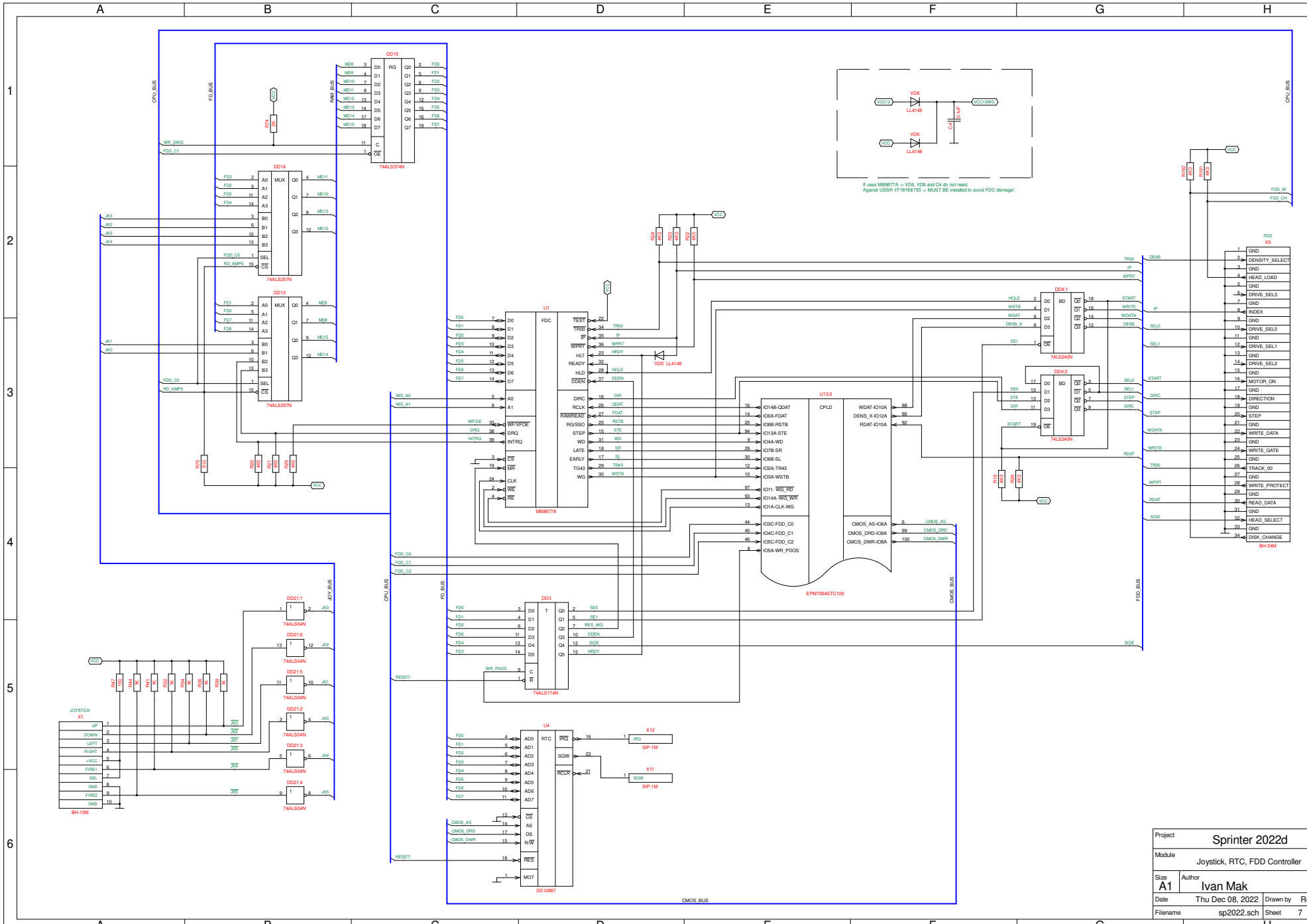
DD15
74ALS374N
DD14
74ALS257N
DD13
74ALS257N
U1
MB8877A
U13:2
EPM7064STC100
DD3
74ALS174N
U4
DS12887
DD21:1
DD21:6
DD21:5
DD21:2
DD21:3
DD21:4
74ALS04N
DD4:1
DD4:2
74LS240N
JOYSTICK
X1
BH-10M
FDD
X5
BH-34M
VD8
LL4148
VD6
LL4148
VD5 LL4148
C41 0.1uF
If uses MB8877A -> VD6, VD8 and C4 do not need.
Against USSR KP1818ВГ93 -> MUST BE installed to avoid FDC damage!
CPU_BUS
FD_BUS
RAM_BUS
JOY_BUS
CMOS_BUS
Project Sprinter 2022d
Module Joystick, RTC, FDD Controller
Size A1
Author Ivan Mak
Rev A
Date Thu Dec 08, 2022
Drawn by RomanRom2
Filename sp2022.sch
Sheet 7 of 7